THE CONSTRUCTION OF SMOKE DETECTOR AND ITS RELEVANCE IN SCHOOL SETTINGS

*****Mohammed Mohammed[1], Galo Yahaya Sara[2] and Tabita Sule Gaba (PhD)[3]
[1]Department of Physics
Umar Suleiman College of Education Gashua, Yobe State.
[2]Department of Chemistry
Umar Suleiman College of Education Gashua, Yobe State.
[3]Department of Biology
Umar Suleiman College of Education Gashua, Yobe State.

*Corresponding Author Information:-
E-Mail: msquare202004@yahoo.com
Phone: +234803331048

Abstract

The study was an attempt to construct an MQ2 smoke detector using used electronic components and local technology to automatically detect smoke by activating its alarm. When the device was on for the first time, it triggers the LED and the alarm on, and sounded for a minute before the alarm stops. Further attempt to exposes the device to smoke from any combustible source whether direct or indirect, the detector will triggers the alarm again by making a piping sound, indicating that fire is on in or around the vicinity of the device. The detector was tested during the day as well as during night and the desired effect was observed. Relevance of the work in teaching/learning was highlighted. Recommendation for further improvement was proposed.

Introduction

"A smoke detector is a device that detects smoke as a result of fire incidence from a nearby fire. Smoke detector is designed to provide early warning for fire, involving ordinary combustible materials, that is expected to progress through distinct incipient and/or smoldering stages. The type, volume, and density of smoke produced during the fire developmental progress will vary greatly depending on the fuels involved and the amount of oxygen available. Typically, the greatest volume of visible smoke is produced during the ignition stage and the smoldering stage".

The first automatic electric fire alarm was patented in (1980) by Francis Robbins, an associate of Thomas Edison. George Andrew Darby patented the first European electrical heat detector in (1902) at Birmingham, England. Different types of smoke detectors were invented such as ionization chamber smoke detector and photo-electric smoke detector. 1n (1939), Swiss physicist Ernst Meili devised an ionization chamber device capable of detecting combustible gases in mines. He also invented a cold cathode tube that could amplify the small signal generated by the detection mechanism to a strength sufficient to activate an alarm while the photoelectric (optical) smoke detector was invented by Donald Steele and Robert Emmerk of Electro Signal Lab and patented in (1972) as contained in (Brawnier Brian, 2017). As of now, there are different types of detectors invented with different method of detection, e.g fire detector using captured area, GSM embedded fire detector which sends an SMS to the appropriate personnel, a wireless fire detecting sensor network using ARM 7 base microcontroller and so on (Izhangg, 2018).

With the current wave of poverty, there is a need to invent a smoke detecting device that is low cost and will have to perform the work of any other smoke detector and to an extent of sounding alarm so as to give early awareness of the presence of fire. This is to be done so as to safeguard possibly each house. To avoid the destruction of life and properties and to make sure that every house has a right to a smoke detector (Kalebaone, 2017).

According to Izhangg (2018) as contained in (Frank Quackenbush, 2015), smoke detectors are not the same as 'smoke alarms'. A smoke alarm includes the audible sounder in the same unit as the smoke sensor, while a smoke detector contains only the sensor and relies on external sounders. Smoke detectors are often used in large buildings, whereas smoke alarms are usually found in private residences. Smoke detectors are often part of a fire alarm system that may include sprinklers, fire alarm pull stations, and a control panel.

Photoelectric smoke detectors

Photoelectric technology uses a beam of light and a photocell inside the chamber, so when smoke enters the chamber it deflects the beam, causing it to strike the photocell and showing there is a smoke emergency in the occupancy, according to Neel am Kumari (2009) as contained in (Fleming, 2011) smoke detector reacts most quickly to smoldering fire that release relatively large amount of smoke.

Ionization chamber smoke detector

Ionization smoke alarms use amounts of radioactivity that consists of two plates with a voltage across them, in this process the negative electron is attracted to the plate with a positive voltage, and the positive atom is attracted to the plate with a negative voltage current that flow all the time between the two ionization smoke alarm and use small electrodes in the chamber. So, when smoke enters the ionization chamber, it disrupts this current and the smoke particles attach to the

ions neutralize them. The smoke alarm senses the drop-in current between the plates, which cause the alarm to activate (Fleming, 2011). The ionization chamber smoke detector is quicker at sensing flaming fires that produce little smoke.

Materials and method

This section discusses the construction of smoke detector using ionization method. The materials that made up the entire system were discussed. The principle of operation was equally highlighted. The materials needed for the construction are MQ2 smoke sensor, LM358 chip, 9V DC battery, jumper wire, buzzers, LED (blue), resistors (10kΩ × 2, 330Ω), Capacitor (0.1µF), potentiometer and Vero board. As depicted below, series and parallel connections was used throughout to design the system. The smoke detector was connected to LED (blue) and a microcontroller at the same time. The LED (blue) was for an indication that the device is working perfectly and also for detection of smoke. The microcontroller serves as the monitor for the sensor and lastly a DC battery serves as a power for the device.

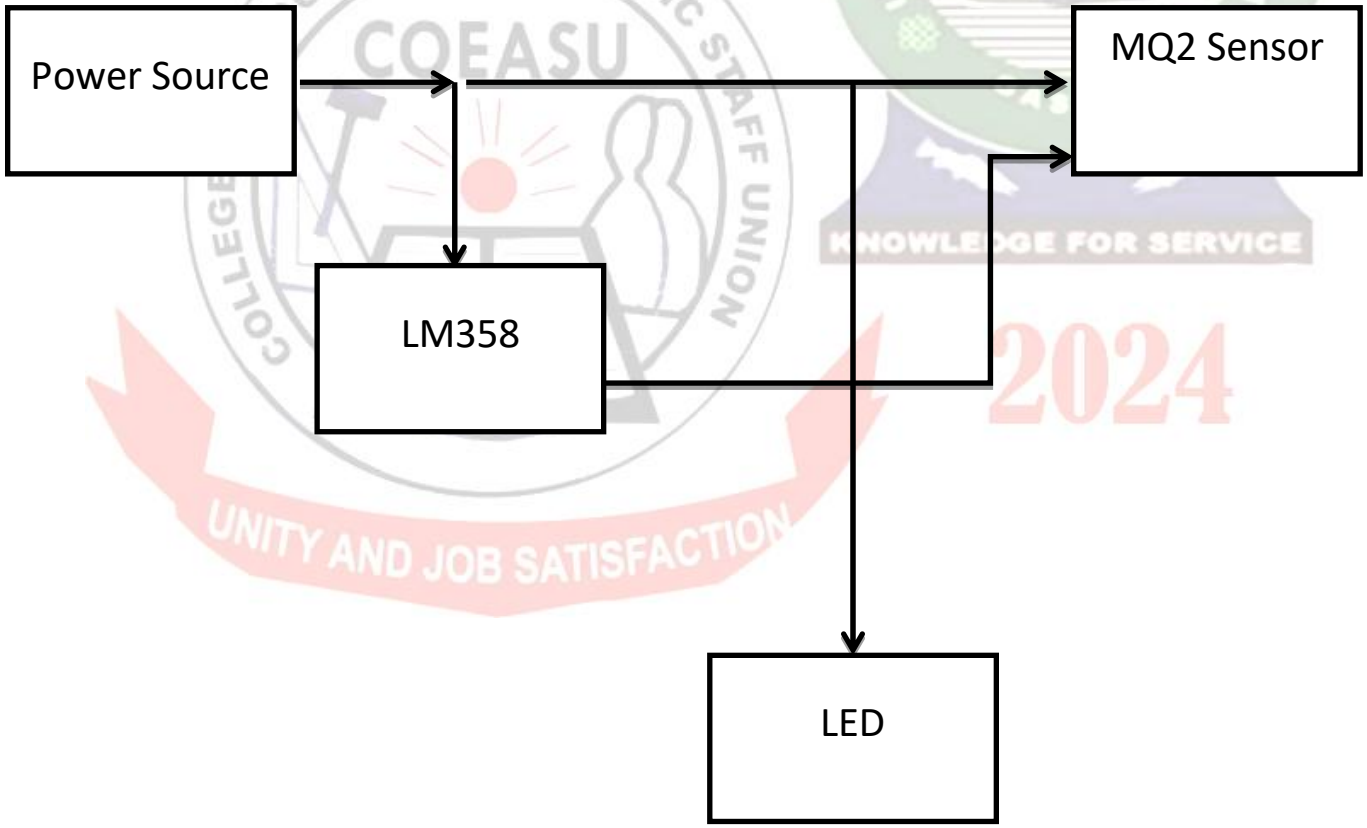

Fig (A): MQ2 gas sensor

MQ2 Gas sensor is a device that is made to detect the presence of LPG, Hydrogen, and also used to detect methane and other combustible steam; it is low cost and suitable for different application. The sensor was sensitive to flammable gas and smoke.

LM358

The LM358 is a low power dual operational amplifier integrated circuit originally introduced by National Semiconductor. It is used in detector circuit; it serves as the processor of the device.

LED

Light emitting diode is mainly a P-N semiconductor device, adopting direct band-gap semiconductor materials to generate light through electron hole-pair recombination. This is used as an indication (last for few minutes) as the system is on and was also used as indicator of presence of smoke.

Power source

A power source is a means of generating power supply which could be in two forms AC (alternative current) or DC (direct current), which in this case, we used DC power supply.

Smoke detector assembly procedure

The circuit diagram above consists of two section namely the input and output sections; these sections serve different purpose on the device. The prototype of the device was done on a board, it contain the materials listed above. The LM358 IC was mounted first, the first terminal was connected to the potentiometer, third terminal as well as the capacitor's positive terminal and the negative terminal of the capacitor was connected to the 8th terminal of the IC (LM358). The 4th terminal of the IC was connected to a resistor which is connected to the LED negative terminal. The potentiometer was connected to the blue LED and the MQ2 smoke sensor which was connected to the LED and IC (LM358), the IC was connected to the power source whereas the potentiometer served as the control for the sensitivity of the smoke sensor (MQ2), and LM358 IC served as the microprocessor or a programmed computer of the device. While the resistors and the capacitor serves as the voltage divider and a means of storing energy for the device respectively, the LED and the buzzer serves as the indicators and lastly the DC battery of 9V as the power source. After all the process it was mounted on to the Vero board for permanent assembling of the components.

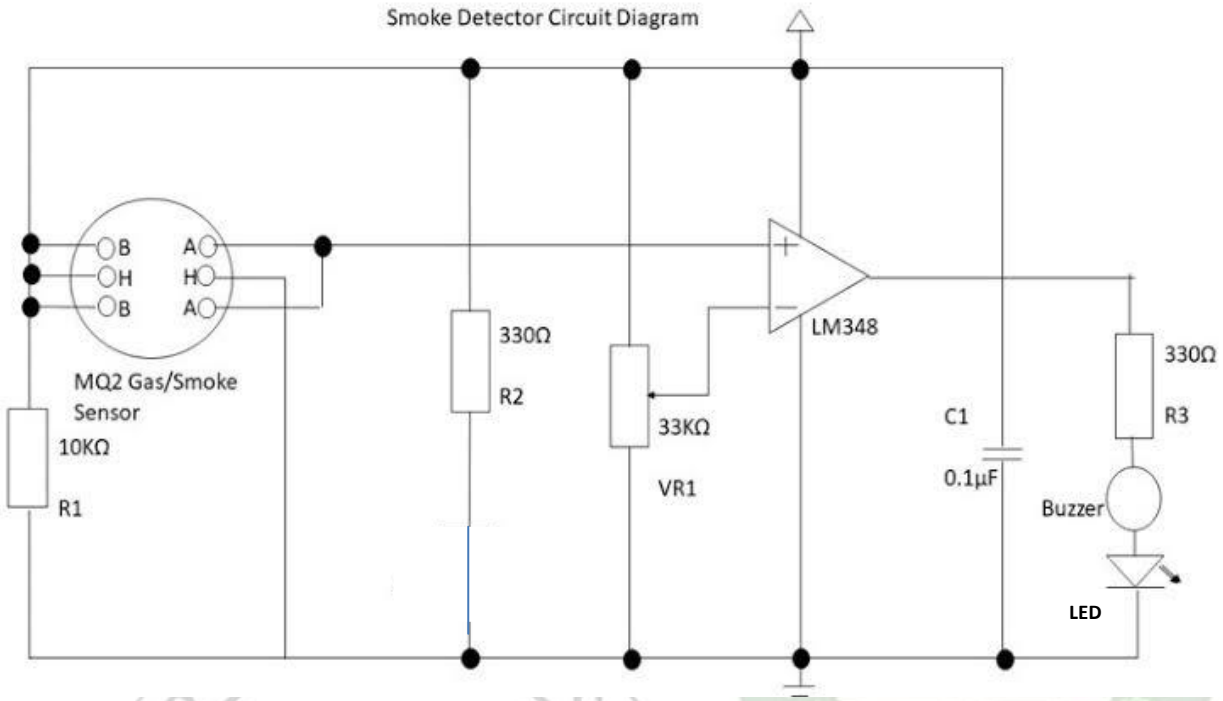

Fig (B): gas sensor circuit diagram

The input circuit shown in fig (B) consists of the MQ2 smoke and a resistor, the smoke sensor receives the amount of smoke needed to trigger the alarm and then the resistor serves as voltage divided for the smoke sensor so as to allow the passage of the appropriate voltage needed to run the sensor.

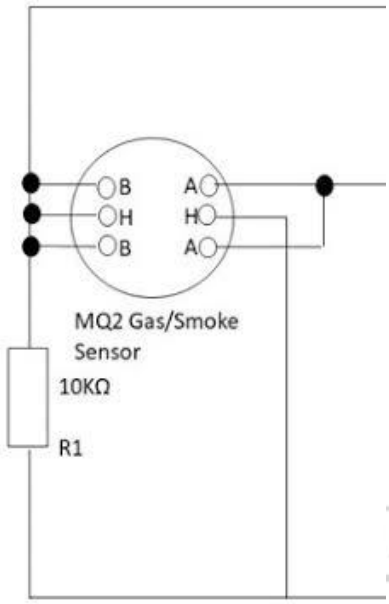

Fig (C): output of section MQ2 gas sensor

Fig (C) shows the output section which consists of two resistors and a capacitor, LED and the buzzer was presented when the smoke was detected, the device is active while the LED (blue) indicate the presence of smoke which would issue an alarm mode, hence the buzzer will be triggered to sound an alarm.

Result and discussion

Introduction

This chapter explains the results and discusses the problem solving technologies during the process of constructing the device. The data collection was achieved using MQ2 gas sensor. The data was analyzed and compared with information obtained from the several reference sources such as OSHA and WHO.

Project result

The output result of the project work was air quality monitoring and control. Blue LED is turned on as a result of power supply through the system and the LCD displays the activities of the system.

Project Discussion

Prototype MQ2 gas sensor constructed was based on the objectives set, which was to analyze a detector circuit for a gas sensor. The sensor node detects the level of concentration of the gas exposed and converts it into analog voltage and directly sending it to trigger the alarm.

Conclusion

The MQ2 gas sensor was constructed according to the circuit design. The detector was tested during the day as well as during the night and was found to perform in accordance with the standard objectives set at the beginning of the work.

The relevance of MQ2 gas sensor in schools

One of the important linkages of this work to education is that, smoke detectors are the leading lifesaving device in school fire safety. Most fatal school fires occur at night while student are asleep. Smoke detectors can alert sleeping students before they become fire victims. By installing and maintaining smoke detectors in school, one can reduce the chances of dying in a fire by 50%. Smoke detectors can be installed in all school buildings, especially, in every room where someone sleeps. Smoke detectors should be tested monthly and the batteries should be replaced at least yearly or after some predetermined time. Never borrow a battery from your smoke detector for any reason.

Example, 96% of U.S homes have smoke detectors. However 23% of the smoke detectors do not work because of dead or missing batteries. Smoke detectors provide early warning to a fire. If it is used properly it can save your life. But don't wait until your smoke detector sounds to develop an escape plan (Funnel, M 2015).

Reference

Funnel Michael (2015) an analysis of teachers' and their students' views of "smoke detector" Research in Science Education, 17(2), 212-219.

Suneel Madunuru et al; (2011) International Journal Computer Science and Information Technologies Vol. 2(6), 2011; 2531-2540 ISSN: 09759646

Punam P. and Shamik T. (2012 "International Journal of Computer Applications" Volume 58 – No. 18; 00975-8887.

Shin, J, C, Chris H, Kristen A.P, and Andre M. (2007); "Fire detection using smoke and gas sensors" Final manuscript submitted to the fire safety journal.

Manav Jain and Mohammad Jawaid Siddiqui (2014) "Optical Smoke Detector" US Patent 3863076, Issued.

Brawner Brian L; et al (2017). "International Journal of Computer Applications" Volume 58 – no. 18 00975-887.

Neelam Kumari, et al (2018). "Fire detection using smoke and gas sensor" Final manuscript submitted to the fire safety journal.

Izhang; A.A et al (2018). IOSR Journal of Electronics Engineering (2017) IOSR – IEEE ISSN: 22781676, P ISSN:2320-3331, Volume 12, Issue 3ver. 11, pp 4753 www.iosrjournals.org.

Kelebaone Tsamaasel, et al (2017). "Birmingham Inventors and Ventions". H.M. patent. Office (originally 1881). S.R. publishers. ISBN 0-85409-578-0.

S. George, et al (IJSRP 2014). An efficient way of generating CRC bit for serial data using any polynomial. International Journal of Scientific and Research Publications, Volume 4, Issue 4, April 2014. ISSN22503153.

COLLEGES OF EDUCATION ACADEMIC STAFF UNION
COEASU
UNITY AND JOB SATISFACTION
UMAR SULEIMAN COLLEGE OF EDUCATION GASHUA
KNOWLEDGE FOR SERVICE
2024